Product series

Series name	Mounting type: Basic	FA	FB	CB	LB	Acting type	Bore size	CS1–J	DS1–J	CS1–G	DS1–G	DS1–H
Double acting type: ACQ	●	●	●	●	●	Double acting	12			●	●	
							16			●	●	
							20			●	●	
							25			●	●	
							32	●	●	●	●	
							40	●	●	●	●	
							50	●	●	●	●	
							63	●	●	●	●	
							80	●	●	●	●	
							100	●	●	●	●	
							125			●	●	●
							140			●	●	●
							160			●	●	●
Double rod type: ACQD												
Adjustable stroke type: ACQJ	●	●	●		●							
Single acting type: ASQ, ATQ	●	●	●	●	●	Single acting	12			●	●	
							16			●	●	
							20			●	●	
							25			●	●	
							32	●	●	●	●	
							40	●	●	●	●	
							50	●	●	●	●	
							63	●	●	●	●	
With guider type: TACQ						Double acting	12			●	●	
							16			●	●	
							20			●	●	
							25			●	●	
							32	●	●	●	●	
							40	●	●	●	●	
							50	●	●	●	●	
							63	●	●	●	●	
							80	●	●	●	●	
							100	●	●	●	●	
Page	250								261			397

ACQ

Installation and application

1. When load changes in the work, the cylinder with abundant output capacity shall be selected.
2. Relative cylinder with high temperature resistance or corrosion resistance shall be chosen under the condition of high temperature or corrosion.
3. Necessary protection measure shall be taken in the environment with higher humidity, much dust or water drops, oil dust and welding dregs.
4. Dirty substances in the pipe must be eliminated before cylinder is connected with pipeline to prevent the entrance of particles into the cylinder.
5. The medium used by cylinder shall be filtered to 40 μ m or below.
6. As both of the front cover and piston of the cylinder are short, typically too large stroke can not be selected.
7. Anti-freezing measure shall be adopted under low temperature environment to prevent moisture freezing.
8. The cylinder shall avoid the influence of side load in operation to maintain the normal work of cylinder and extend the service life.
9. If the cylinder is dismantled and stored for a long time, please conduct anti-rust treatment to the surface. Anti-dust caps shall be added in air inlet and outlet ports. The front and back cover can not be dismantled, which shall be especially noticed.
10. C clip Installation:
    10.1. Removal & Installation of C clip must be done with proper tool & care.
    10.2. Ensure C clip is securely fitted into the proper slot to prevent leakage.

Criteria for selection: Cylinder thrust

Unit: Newton(N)

Bore size (mm)	Rod size (mm)	Acting type		Pressure area (mm^2)	Operating pressure(MPa) 0.1	0.2	0.3	0.4	0.5	0.6	0.7
12	6	Single acting	Push side	113.1	-	13.6	24.9	36.2	47.5	58.9	70.2
			Pull side	84.8	-	8.0	16.4	24.9	33.4	41.9	50.4
		Double acting	Push side	113.1	11.3	22.6	33.9	45.2	56.5	67.9	79.2
			Pull side	84.8	8.5	17.0	25.4	33.9	42.4	50.9	59.4
16	8	Single acting	Push side	201.1	-	27.0	47.1	67.2	87.3	107.4	127.5
			Pull side	150.8	-	17.0	32.0	47.1	62.2	77.3	92.4
		Double acting	Push side	201.1	20.1	40.2	60.3	80.4	100.5	120.6	140.7
			Pull side	150.8	15.1	30.2	45.2	60.3	75.4	90.5	105.6
20	10	Single acting	Push side	314.2	-	36.8	68.2	99.7	131.1	162.5	193.9
			Pull side	235.6	-	21.1	44.7	68.2	91.8	115.4	138.9
		Double acting	Push side	314.2	31.4	62.8	94.2	125.7	157.1	188.5	219.9
			Pull side	235.6	23.6	47.1	70.7	94.2	117.8	141.4	164.9
25	12	Single acting	Push side	490.9	18.1	67.2	116.3	165.3	214.4	263.5	312.6
			Pull side	377.8	6.8	44.6	82.3	120.1	157.9	195.7	233.4
		Double acting	Push side	490.9	49.1	98.2	147.3	196.3	245.4	294.5	343.6
			Pull side	377.8	37.8	75.6	113.3	151.1	188.9	226.7	264.4
32	16	Single acting	Push side	804.2	27.4	107.8	188.3	268.7	349.1	429.5	510.0
			Pull side	603.2	7.3	67.6	128.0	188.3	248.6	308.9	369.2
		Double acting	Push side	804.2	80.4	160.8	241.3	321.7	402.1	482.5	563.0
			Pull side	603.2	60.3	120.6	181.0	241.3	301.6	361.9	422.2

Bore size (mm)	Rod size (mm)	Acting type		Pressure area (mm^2)	Operating pressure(MPa) 0.1	0.2	0.3	0.4	0.5	0.6	0.7
40	16	Single acting	Push side	1256.6	44.7	170.3	296.0	421.7	547.3	673.0	798.6
			Pull side	1055.6	24.6	130.1	235.7	341.2	446.8	552.3	657.9
		Double acting	Push side	1256.6	125.7	251.3	377.0	502.7	628.3	754.0	879.6
			Pull side	1055.6	105.6	211.1	316.7	422.2	527.8	633.3	738.9
50	20	Single acting	Push side	1963.5	96.3	292.7	489.0	685.4	881.7	1078.1	1274.4
			Pull side	1649.3	64.9	229.9	394.8	559.7	724.7	889.6	1054.5
		Double acting	Push side	1963.5	196.3	392.7	589.0	785.4	981.7	1178.1	1374.4
			Pull side	1649.3	164.9	329.9	494.8	659.7	824.7	989.6	1154.5
63	20	Single acting	Push side	3117.2	141.7	453.4	765.2	1076.9	1388.6	1700.3	2012.1
			Pull side	2803.1	110.3	390.6	670.9	951.2	1231.5	1511.9	1792.2
		Double acting	Push side	3117.2	311.7	623.4	935.2	1246.9	1558.6	1870.3	2182.1
			Pull side	2803.1	280.3	560.6	840.9	1121.2	1401.5	1681.9	1962.2
80	25	Double acting	Push side	5026.5	502.7	1005.3	1508.0	2010.6	2513.3	3015.9	3518.6
			Pull side	4535.7	453.6	907.1	1360.7	1814.3	2267.8	2721.4	3175.0
100	32	Double acting	Push side	7854.0	785.4	1570.8	2356.2	3141.6	3927.0	4712.4	5497.8
			Pull side	7049.7	705.0	1409.9	2114.9	2819.9	3524.9	4229.8	4934.8
125	32	Double acting	Push side	12271.8	1227.2	2454.4	3681.5	4908.7	6135.9	7363.1	8590.2
			Pull side	11467.6	1146.8	2293.5	3440.3	4587.0	5733.8	6880.6	8027.3
140	32	Double acting	Push side	15393.8	1539.4	3078.8	4618.1	6157.5	7696.9	9236.3	10775.7
			Pull side	14589.6	1459.0	2917.9	4376.9	5835.8	7294.8	8753.8	10212.7
160	40	Double acting	Push side	20106.2	2010.6	4021.2	6031.9	8042.5	10053.1	12063.7	14074.3
			Pull side	18849.6	1885.0	3769.9	5654.9	7539.8	9424.8	11309.8	13194.7

www.lahegh.com

Symbol

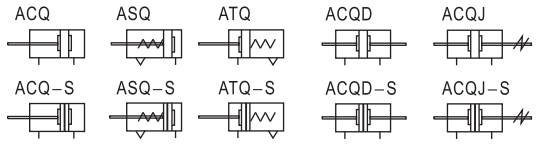

Product feature

1. JIS standard is implemented.
2. C clip is adopted to connect the cylinder body and back cover or front cover, and riveted structure is adopted to connect piston and piston rod to make it compact and reliable.
3. The internal diameter of the body is treated with rolling followed by the treatment of hard anodizing, forming an excellent abrasion resistance and durability.
4. The seal of piston adopts heterogeneous two-way seal structure. It has compact dimension and the function of grease reservation.
5. Compact structure can effectively save installation space.
6. There are magnetic switch slots around the cylinder body, which is convenient to install inducting switch.
7. Installing accessories with various specifications are optional.

Specification

Bore size(mm)		12	16	20	25	32	40	50	63	80	100
Acting type		Double acting									
		Single acting-Push type, Single acting-Pull type								–	
Fluid		Air(to be filtered by 40 μ m filter element)									
Operating pressure	Double acting	0.1~1.0MPa(15~145psi)(1.0~10.0bar)									
	Single acting	0.2~1.0MPa(28~145psi)(2.0~10.0bar)									
Proof pressure		1.5MPa(215psi)(15bar)									
Temperature ℃		-20~80									
Speed range mm/s		Double acting: 30~500 Single acting: 50~500									
Stroke tolerance		$0\sim150^{+1.0}_{0}$ $>150^{+1.4}_{0}$									
Cushion type		Bumper									
Port size ①		M5×0.8				1/8"		1/4"		3/8"	

① PT thread, NPT thread and G thread are available. Add) Refer to P397~420 for detail of sensor switch.

Stroke

Bore size (mm)		Standard stroke (mm)	Max. std stroke	Max. stroke Without magnet	Max. stroke With magnet
12	Double acting	5 10 15 20 25 30 35 40 45 50	50	80	70
	Single acting	5 10 15 20	20	–	-
16	Double acting	5 10 15 20 25 30 35 40 45 50 55 60	60	80	70
	Single acting	5 10 15 20	20	-	-
20 25	Double acting	5 10 15 20 25 30 35 40 45 50 60 70 75 80 90 100	100	140	130
	Single acting	5 10 15 20 25 30	30	-	-
32 40 50 63	Double acting	5 10 15 20 25 30 35 40 45 50 60 70 75 80 90 100	100	100	100
	Single acting	5 10 15 20 25 30			
80 100	Double acting	5 10 15 20 25 30 35 40 45 50 60 70 75 80 90 100	100	-	-

Note) 1. Please contact the company for other special strokes.
2. The dimensions of non-std stroke cylinder has the same dimensions as the next longer stroke std. stroke cylinder. e.g. 23mm stroke cylinder has the same dimensions of 25 std. stroke cylinder.

Ordering code

ACQ 20×30 S B □ □

ACQD 20×30 S B □ □

ACQJ 20×30-30 S B □ □

Model

ACQ: Compact cylinder(Double acting)
ASQ: Compact cylinder (Single acting-push)
ATQ: Compact cylinder (Single acting-pull)
ACQD: Compact cylinder(Double rod)
ACQJ: Compact cylinder (Adjustable stroke)

Bore size

Model	Bore size
ACQ	12 16 20 25 32 40 50 63 80 100
ASQ	12 16 20 25 32 40 50 63
ATQ	12 16 20 25 32 40 50 63
ACQD	12 16 20 25 32 40 50 63 80 100
ACQJ	12 16 20 25 32 40 50 63 80 100

Stroke

Refer to stroke table for details

Adjustable stroke

Model	Adjustable stroke
ACQJ	10: 10mm
	20: 20mm
	30: 30mm
	40: 40mm
	50: 50mm
	75: 75mm
	100: 100mm
Others	No this code

Thread type ②

Blank: PT
T: NPT
G: G

Mounting type ①

Model	Mounting type
ACQ ASQ ATQ	Blank: No accessories
	FA: FA type
	FB: FB type
	CB: CB type
	LB: LB type
ACQD ACQJ	Blank: No accessories
	FA: FA type
	FB: FB type
	LB: LB type

Rod type

Blank: Female thread
B: Male thread

Magnet

Blank: Without magnet
S: With magnet

① Please refer to page 261 for accessory parts.
② Standard thread is blank here.

www.Laheghi.com

Inner structure and material of major parts

ACQ

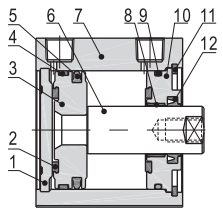

ACQS

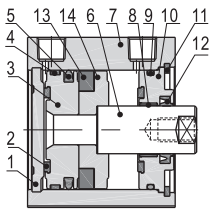

NO.	Item		Material
1	Back cover		No(Φ12, 16)\Aluminum alloy(Others)
2	Bumper		TPU(Φ12~25)NBR(Others)
3	Piston		Brass(Φ12, 16)\Aluminum alloy(Others)
4	Wear ring		No(Φ12~32)\Wear resistant material(Others)
5	Piston seal		NBR
6	Piston rod		Carbon steel with 20μm chrome plated
7	Body		Aluminum alloy
8	Bushing		No(Φ12~32)\Wear resistant material(Others)
9	O-ring		NBR
10	Front cover		Aluminum alloy
11	C clip		Spring steel
12	Front cover packing		NBR
13	Magnet	Φ12~25	Sintered metal(Neodymium-iron-boron)
		Others	Plastic
14	Magnet holder		Brass(Φ12, 16)Aluminum alloy(Others)

Dimensions

ACQ

Φ12, Φ16

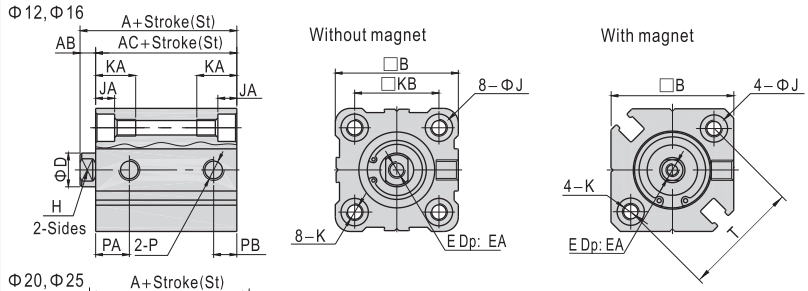

Φ20, Φ25

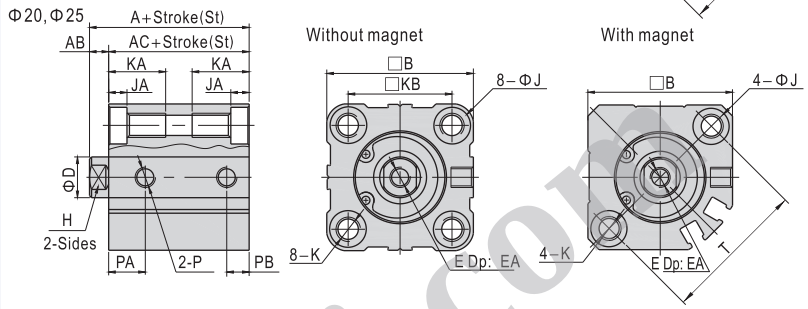

Bore size\Item	A			AC			PA	PB	A	AC	PA	PB	AB
	Without magnet								With magnet				
	St≤50	St=55	St≥60	St≤50	St=55	St≥60	–	–					
12	20.5	-	-	17	-	-	7.5	5	31.5	28	9	7	3.5
16	22	22	-	18.5	18.5	-	8	5.5	34	30.5	9.5	5.5	3.5
20	24	-	34	19.5	-	29.5	9	5.5	36	31.5	9.5	5.5	4.5
25	27.5	-	37.5	22.5	-	32.5	11	5.5	37.5	32.5	11	5.5	5

Bore size\Item	B	D	E	EA	H	J	JA	K	KA	KB	P	T
12	25	6	M3×0.5	6	5	6.5	3.5	M4×0.7 Thru.hole: Φ3.4	11	15.5	M5×0.8	22
16	29	8	M4×0.7	8	6	6.5	3.5	M4×0.7 Thru.hole: Φ3.4	11	20	M5×0.8	28
20	36	10	M5×0.8	7	8	9	7	M6×1.0 Thru.hole: Φ5.2	17	25.5	M5×0.8	36
25	40	12	M6×1.0	12	10	9	7	M6×1.0 Thru.hole: Φ5.2	17	28	M5×0.8	40

Φ32～Φ100 (Stroke≤100)

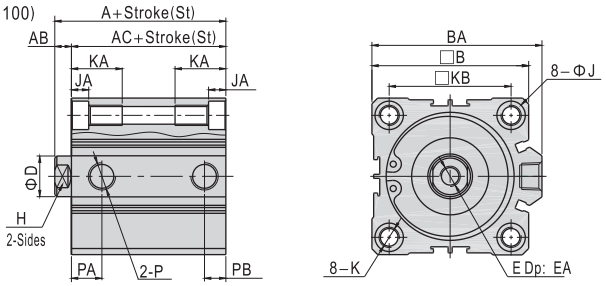

Item	A		AC		A	AC	AB	B	BA	D	E	EA
	Without magnet				With magnet							
Bore size\Stroke	St≤50	St≥60	St≤50	St≥60	-	-						
32	30	40	23	33	40	33	7	45	49.5	16	M8×1.25	13
40	36.5	46.5	29.5	39.5	46.5	39.5	7	53	57	16	M8×1.25	13
50	38.5	48.5	30.5	40.5	48.5	40.5	8	64	71	20	M10×1.5	15
63	44	54	36	46	54	46	8	77	84	20	M10×1.5	15
80	53.5	63.5	43.5	53.5	63.5	53.5	10	98	104	25	M16×2.0	20
100	65	75	53	63	75	63	12	117	123.5	32	M20×2.5	26

Bore size\Item		H	J	JA	K	KA	KB	P	PA	PB	PA	PB
									Without magnet		With magnet	
32	St=5	14	9	7	M6×1.0 Thru.hole: Φ5.2	17	34	1/8"	7.5	6.5	10.5	7.5
	St>5								10.5	7.5		
40		14	9	7	M6×1.0 Thru.hole: Φ5.2	17	40	1/8"	11	8	11	8
50	St=5	17	11	8	M8×1.25 Thru.hole: Φ6.8	22	50	1/4"	9	9	10.5	10.5
	St>5								10.5	10.5		
63	St=5	17	14	10.5	M10×1.5 Thru.hole: Φ8.5	28.5	60	1/4"	14	9.5	15	10.5
	St>5								15	10.5		
80		22	17.5	13.5	M12×1.75 Thru.hole: Φ10.3	35.5	77	3/8"	16	14	16	14
100		27	17.5	13.5	M12×1.75 Thru.hole: Φ10.3	35.5	94	3/8"	20	17.5	20	17.5

www.Labasic.com

ASQ, ATQ

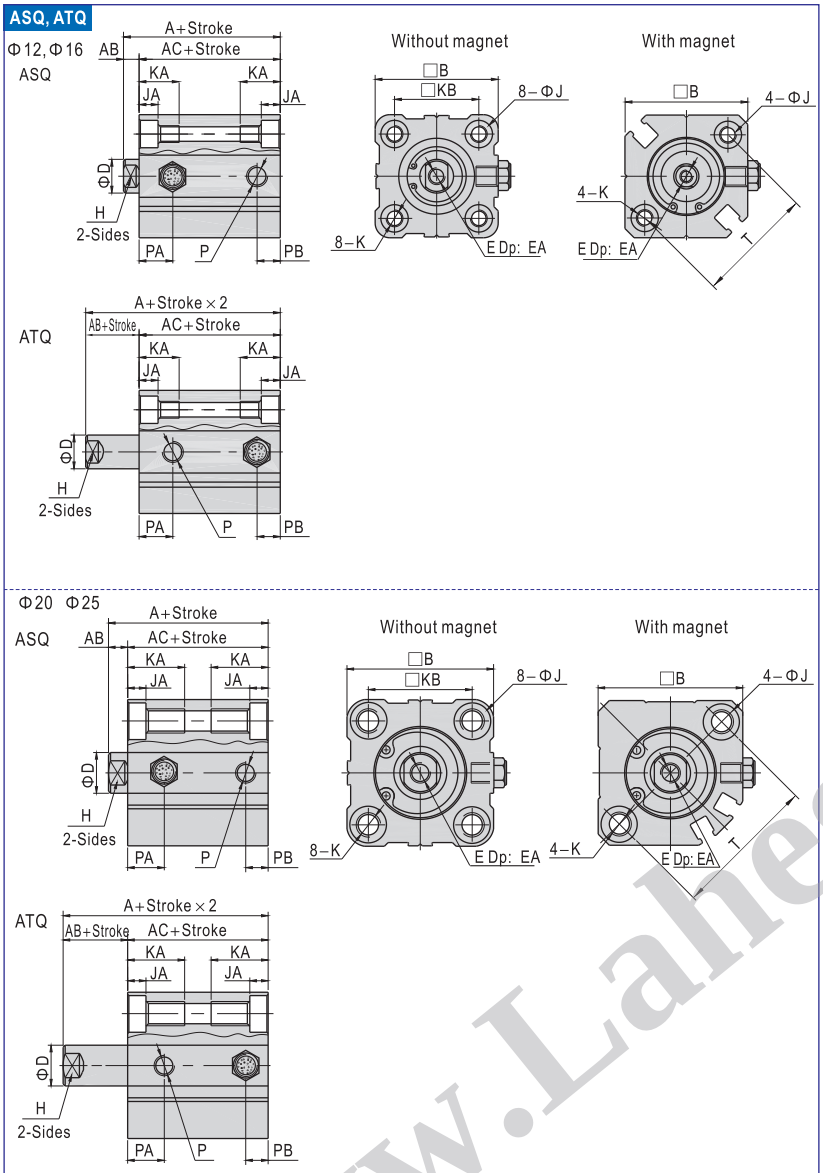

Bore size\Item	A(Without magnet)			A(With magnet)			AB	B	BA	D
Stroke	5\10	15\20	25\30	5\10	15\20	25\30				
12	25.5	30.5	-	36.5	41.5	-	3.5	25	-	6
16	27	32	-	39	44	-	3.5	29	-	8
20	29	34	39	41	46	51	4.5	36	-	10
25	32.5	37.5	42.5	42.5	47.5	52.5	5	40	-	12
32	35	40	45	45	50	55	7	45	49.5	16
40	41.5	46.5	51.5	51.5	56.5	61.5	7	53	57	16
50	48.5	53.5	58.5	58.5	63.5	68.5	8	64	71	20
63	54	59	64	64	69	74	8	77	84	20

Bore size\Item	AC(Without magnet)			AC(With magnet)			E	EA	H
Stroke	5\10	15\20	25\30	5\10	15\20	25\30			
12	22	27	-	33	38	-	M3×0.5	6	5
16	23.5	28.5	-	35.5	40.5	-	M4×0.7	8	6
20	24.5	29.5	34.5	36.5	41.5	46.5	M5×0.8	7	8
25	27.5	32.5	37.5	37.5	42.5	47.5	M6×1.0	12	10
32	28	33	38	38	43	48	M8×1.25	13	14
40	34.5	39.5	44.5	44.5	49.5	54.5	M8×1.25	13	14
50	40.5	45.5	50.5	50.5	55.5	60.5	M10×1.5	15	17
63	46	51	56	56	61	66	M10×1.5	15	17

Bore size\Item	J	JA	K		KA	KB	P
12	6.5	3.5	M4×0.7	Thru.hole: Φ3.4	11	15.5	M5×0.8
16	6.5	3.5	M4×0.7	Thru.hole: Φ3.4	11	20	M5×0.8
20	9	7	M6×1.0	Thru.hole: Φ5.2	17	25.5	M5×0.8
25	9	7	M6×1.0	Thru.hole: Φ5.2	17	28	M5×0.8
32	9	7	M6×1.0	Thru.hole: Φ5.2	17	34	1/8"
40	9	7	M6×1.0	Thru.hole: Φ5.2	17	40	1/8"
50	11	8	M8×1.25	Thru.hole: Φ6.8	22	50	1/4"
63	14	10.5	M10×1.5	Thru.hole: Φ8.5	28.5	60	1/4"

Model	Without magnet		With magnet		T
Bore size\Item	PA	PB	PA	PB	
12	7.5	5	9	7	22
16	8	5.5	9.5	5.5	28
20	9	5.5	9.5	5.5	36
25	11	5.5	11	5.5	40
32	10.5	7.5	10.5	7.5	-
40	11	8	11	8	-
50	10.5	10.5	10.5	10.5	-
63	15	10.5	15	10.5	-

www.Lahechi.com

Male thread

(Bore size: Φ12~Φ100, Stroke≤100)

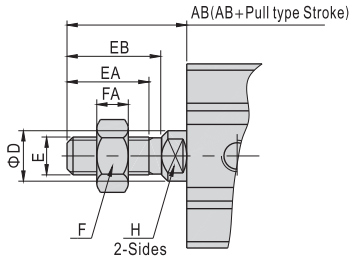

Bore size\Item	AB	D	E	EA	EB	F	FA	H
12	14	6	M5×0.8	9	10.5	8	4	5
16	15.5	8	M6×1.0	10	12	10	5	6
20	18.5	10	M8×1.25	12	14	12	6	8
25	22.5	12	M10×1.25	15	17.5	17	6	10
32	28.5	16	M14×1.5	20.5	23.5	19	8	14
40	28.5	16	M14×1.5	20.5	23.5	19	8	14
50	33.5	20	M18×1.5	26	28.5	27	11	17
63	33.5	20	M18×1.5	26	28.5	27	11	17
80	43.5	25	M22×1.5	32.5	35.5	32	13	22
100	43.5	32	M26×1.5	32.5	35.5	36	13	27

ACQD

Φ12 Φ16

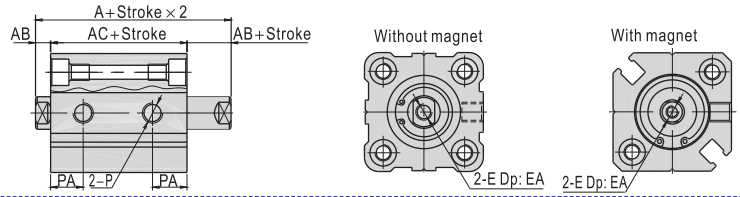

Φ20 Φ25

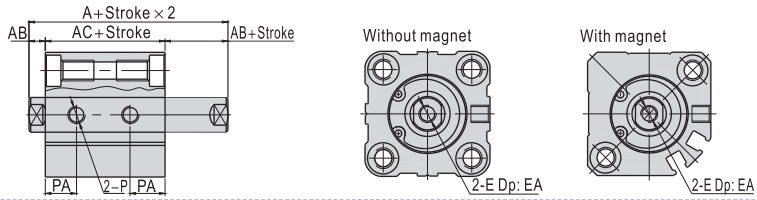

Φ32~Φ100

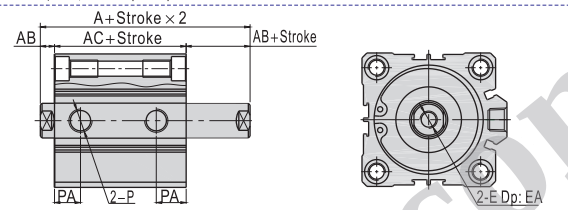

ACQJ

Φ12 Φ16

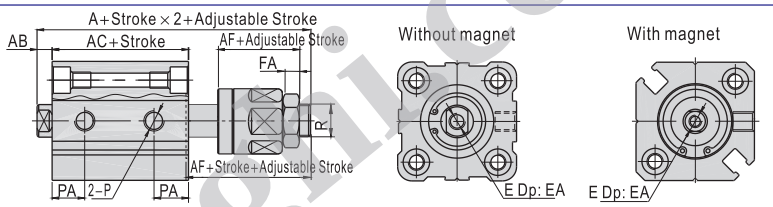

Φ20 Φ25

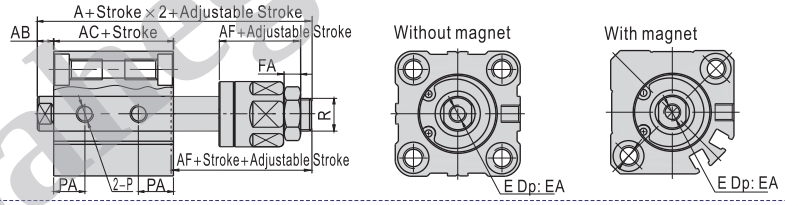

Φ32~Φ100

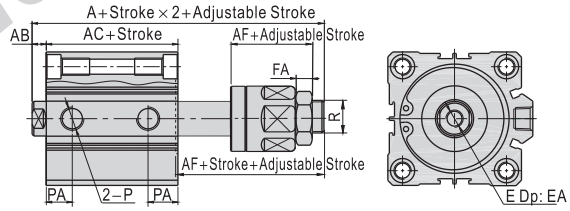

Item	A		A		AB	AC		AC		AF
	Without magnet		With magnet			Without magnet		With magnet		
Bore size\Model	ACQD	ACQJ	ACQD	ACQJ		ACQD	ACQJ	ACQD	ACQJ	
12	32.2	45.2	39.4	52.4	3.5	25.2	25.2	32.4	32.4	17
16	33	50	43	60	3.5	26	26	36	36	21
20	35	55	47	67	4.5	26	26	38	38	25
25	39	60.5	49	70.5	5	29	29	39	39	27
32	44.5	64.9	54.5	74.9	7	30.5	30.5	40.5	40.5	28
40	54	74.5	64	84.5	7	40	40	50	50	28
50	56.5	77	66.5	87	8	40.5	40.5	50.5	50.5	29
63	58	78.4	68	88.4	8	42	42	52	52	29
80	71	95.8	81	105.8	10	51	51	61	61	35.5
100	84.5	114.3	94.5	124.3	12	60.5	60.5	70.5	70.5	42.5

Bore size\Item	E	EA	FA	PA	R
12	M3×0.5	6	4	9	M5×0.8
16	M4×0.7	8	5	9.5	M6×1.0
20	M5×0.8	7	6	9.5	M8×1.25
25	M6×1.0	9.5(St=5)/12(St>5)	6	11	M10×1.25
32	M8×1.25	9(St≤10)/13(St>10)	7	10	M12×1.25
40	M8×1.25	11(St≤10)/13(St>10)	7	13	M12×1.25
50	M10×1.5	12(St≤10)/15(St>10)	8	13.5	M16×1.5
63	M10×1.5	12(St≤10)/15(St>10)	8	14.5(St=5)/16(St>5)	M16×1.5
80	M16×2.0	14(St≤15)/20(St>15)	10	16	M20×1.5
100	M20×2.5	20(St≤25)/26(St>25)	13.5	21	M27×2.0

Remark) The unmarked dimension is the same as ACQ standard type. Please refer to this page for male thread dimensions.

www.Lanegin.com

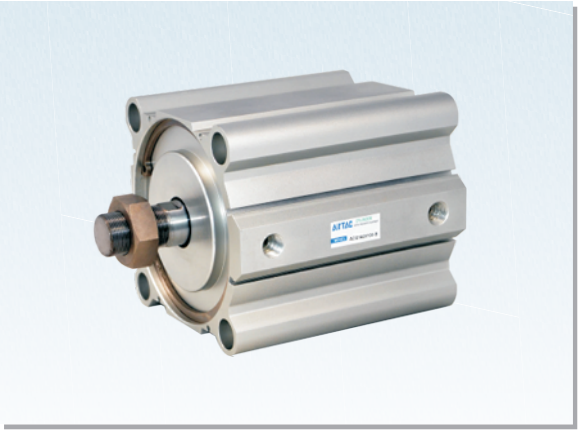

Specification

Bore size(mm)	125	140	160
Acting type	Double acting		
Fluid	Air(to be filtered by 40 μ m filter element)		
Operating pressure	0.05~1.0MPa(7~145psi)		
Proof pressure	1.5MPa(215psi)		
Temperature ℃	-20~80		
Speed range mm/s	30~500		
Stroke tolerance mm	$^{+1.4}_{0}$		
Cushion type	Bumper		
Port size ①	3/8"		

① PT thread, NPT thread and G thread are available. Add) Refer to P397~420 for detail of sensor switch.

Stroke

Bore size (mm)	Standard stroke (mm)	Max. std stroke	Max. stroke
125 140 160	10 20 30 40 50 75 100 125 150 175 200 250 300	300	300

Note) 1. Please contact the company for other special strokes.
2. The dimensions of non-std stroke cylinder has the same dimensions as the next longer stroke std. stroke cylinder. e.g. 23mm stroke cylinder has the same dimensions of 25 std. stroke cylinder.

Symbol

ACQ–S ACQD–S ACQJ–S

ACQ

Product feature

1. JIS standard is implemented.
2. C clip is adopted to connect the cylinder body and back cover or front cover to make it compact and reliable.
3. The internal diameter of the body is treated with rolling followed by the treatment of hard anodizing, forming an excellent abrasion resistance and durability.
4. The seal of piston adopts heterogeneous two-way seal structure. It has compact dimension and the function of grease reservation.
5. Compact structure can effectively save installation space.
6. There are magnetic switch slots around the cylinder body, which is convenient to install inducting switch.

Ordering code

ACQ 125 × 30 S B □

ACQD 125 × 30 S B □

ACQJ 125 × 30–30 S B □

Model

ACQ: Compact cylinder(Double acting)
ACQD: Compact cylinder(Double rod)
ACQJ: Compact cylinder(Adjustable stroke)

Bore size

125 140 160

Stroke

Refer to stroke table for details

Adjustable stroke

Model	Adjustable stroke
ACQJ	10: 10mm
	20: 20mm
	30: 30mm
	40: 40mm
	50: 50mm
	75: 75mm
	100: 100mm
Others	No this code

Magnet

S: With magnet

Rod type

Blank: Female thread
B: Male thread

Thread type

Blank: PT
T: NPT
G: G

Male thread

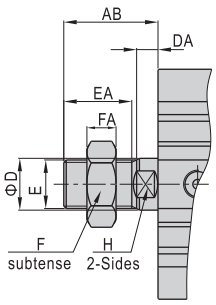

Bore size\Item	AB	D	DA	E	EA	F	FA	H
125	58	32	13	M30 × 1.5	42	46	18	27
140	58	32	13	M30 × 1.5	42	46	18	27
160	64	40	14	M36 × 1.5	47	55	21	36

www.Laheghi.com

Inner structure and material of major parts

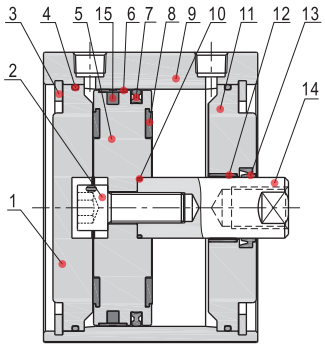

NO.	Item	Material
1	Back cover	Aluminum alloy
2	Screw	Carbon steel
3	C clip	Spring steel
4	O-ring	NBR
5	Piston	Aluminum alloy
6	Wear ring	Wear resistant material
7	Piston seal	NBR
8	Bumper	NBR
9	Body	Aluminum alloy
10	O－ring	NBR
11	Front cover	Aluminum alloy
12	Bushing	Wear resistant material
13	Front cover packing	NBR
14	Piston rod	Carbon steel with 20 μ m chrome plated
15	Magnet	Rubber

Dimensions

ACQ

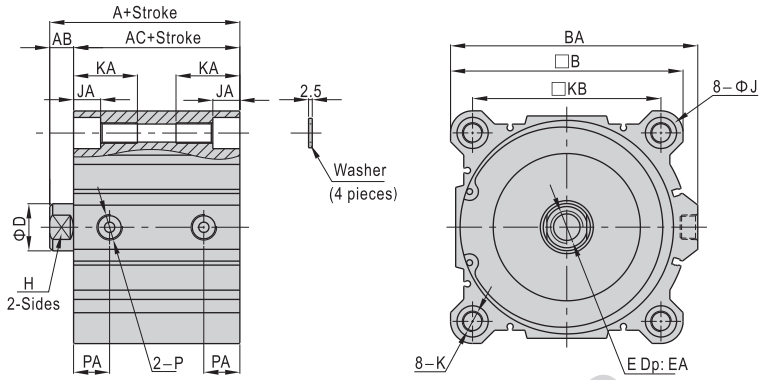

Bore size\Item	A	AB	AC	B	BA	D	E	EA(St≤10)	EA(St>10)	H
125	99	16	83	142	153	32	M22×2.5	22.5	30	27
140	99	16	83	158	168	32	M22×2.5	22.5	30	27
160	108	17	91	178	188	40	M24×3.0	26.5	33	36

Bore size\Item	J	JA	K	KA	KB	P	PA
125	21.5	18.4	M14×2.0 Thru.hole: Φ12.3	43.5	114	3/8"	24.5
140	21.5	18.4	M14×2.0 Thru.hole: Φ12.3	43.5	128	3/8"	24.5
160	24.5	21.2	M16×2.0 Thru.hole: Φ14.3	49	144	3/8"	27.5

Remark) Washer must be used when the cylinder be mounted by through hole.
Please refer to page 254 for male thread dimensions.

ACQD

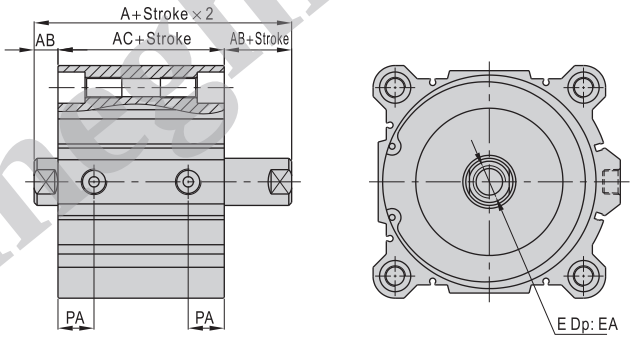

Bore size\Item	A	AB	AC	E	EA St≤10	EA St>10	PA
125	115	16	83	M22×2.5	22.5	30	24.5
140	115	16	83	M22×2.5	22.5	30	24.5
160	125	17	91	M24×3.0	26.5	33	27.5

Remark) The unmarked dimension is the same as ACQ standard type.
Please refer to page 254 for male thread dimensions.

ACQJ

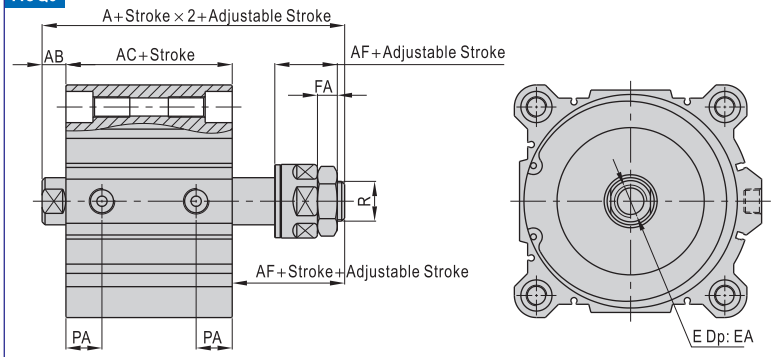

Bore size\Item	A	AB	AC	AF	E	EA St≤10	EA St>10	FA	PA	R
125	140.8	16	83	42.5	M22×2.5	22.5	30	13.5	24.5	M27×2.0
140	140.8	16	83	42.5	M22×2.5	22.5	30	13.5	24.5	M27×2.0
160	175.3	17	91	68	M24×3.0	26.5	33	18	27.5	M36×2.0

Remark) The unmarked dimension is the same as ACQ standard type.
Please refer to page 254 for male thread dimensions.

www.Lahesh.com

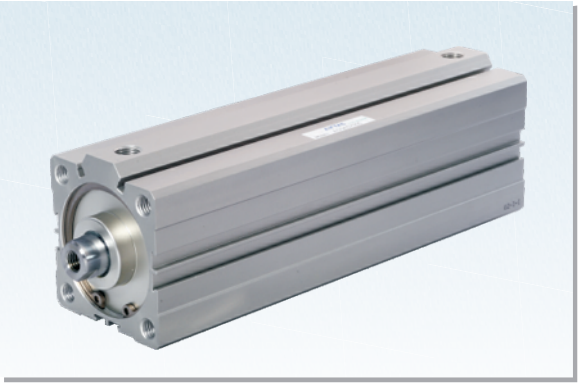

Symbol

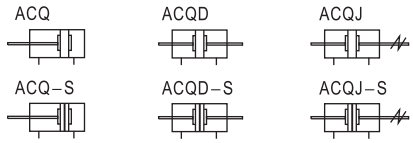

ACQ

Product feature

1. JIS standard is implemented.
2. C clip is adopted to connect the cylinder body and back cover or front cover, and riveted structure is adopted to connect piston and piston rod to make it compact and reliable.
3. The internal diameter of the body is treated with rolling followed by the treatment of hard anodizing, forming an excellent abrasion resistance and durability.
4. The seal of piston adopts heterogeneous two-way seal structure. It has compact dimension and the function of greasel reservation.
5. Compact structure can effectively save installation space.
6. There are magnetic switch slots around the cylinder body, which is convenient to install inducting switch.
7. Installing accessories with various specifications are optional.

Specification

Bore size(mm)	32	40	50	63	80	100
Acting type	Double acting					
Fluid	Air(to be filtered by 40 μ m filter element)					
Operating pressure	0.1~1.0MPa(15~145psi)					
Proof pressure	1.5MPa(215psi)					
Temperature ℃	-20~80					
Speed range mm/s	30~500					
Stroke tolerance mm	$101\sim150^{+1.0}_{0}$ $>150^{+1.4}_{0}$					
Cushion type	Bumper					
Port size ①	1/8"		1/4"		3/8"	

① PT thread, NPT thread and G thread are available. Add) Refer to P397~420 for detail of sensor switch.

Stroke

Bore size (mm)	Standard stroke (mm)	Max. std stroke	Max. stroke
32 40 50 63 80 100	125 150 175 200 250 300	300	350

Note) Within allowable stroke scope, when the stroke is larger than the maximum value, it shall be treated as non-standard one. Please contact the company for other special strokes.

Ordering code

ACQ 50 × 150 S B □ □

ACQD 50 × 150 S B □ □

ACQJ 50 × 150–30 S B □ □

Model

ACQ: Compact cylinder (Double acting)
ACQD: Compact cylinder (Double rod)
ACQJ: Compact cylinder (Adjustable stroke)

Bore size

32 40 50 63 80 100

Stroke

Refer to stroke table for details

Adjustable stroke

Model	Adjustable stroke
ACQJ	10: 10mm
	20: 20mm
	30: 30mm
	40: 40mm
	50: 50mm
	75: 75mm
	100: 100mm
Others	No this code

Thread type

Blank: PT
T: NPT
G: G

Mounting type ①

Model	Mounting type
ACQ	Blank: No accessories
	FA: FA type
	FB: FB type
	CB: CB type
	LB: LB type
ACQD ACQJ	Blank: No accessories
	FA: FA type
	FB: FB type
	LB: LB type

Rod type

Blank: Female thread
B: Male thread

Magnet

Blank: Without magnet
S: With magnet

① Please refer to page 261 for accessory parts.

Inner structure and material of major parts

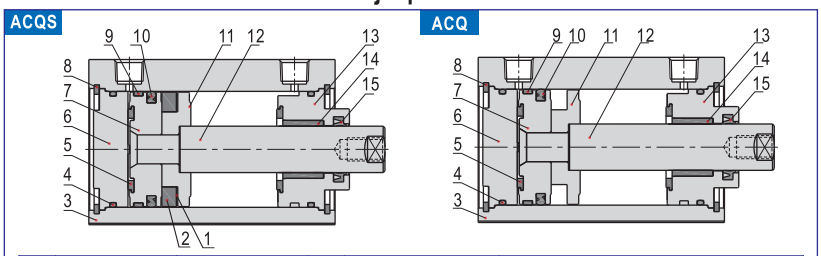

NO.	Item	Material	NO.	Item	Material
1	Magnet washer	NBR	9	Wear ring	No(Φ32)\Wear resistant material(Others)
2	Magnet	Plastic	10	Piston seal	NBR
3	Body	Aluminum alloy	11	Magnet holder	Aluminum alloy
4	O-ring	NBR	12	Piston rod	Carbon steel with 20 μ m chrome plated
5	Bumper	NBR	13	Front cover	Aluminum alloy
6	Back cover	Aluminum alloy	14	Bushing	No(Φ32)\Wear resistant material(Others)
7	Piston	Aluminum alloy	15	Front cover packing	NBR
8	C clip	Spring steel			

www.Lahegh.com

Dimensions

ACQ

Φ32～Φ100(Stroke＞100)

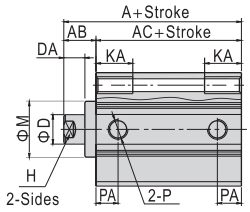

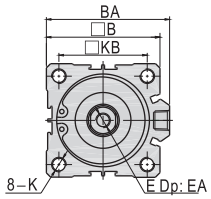

Bore size\Item	A	AB	AC	B	BA	D	DA	E	EA
32	62.5	17	45.5	45	49.5	16	12	M8×1.25	13
40	72	17	55	53	57	16	12	M8×1.25	13
50	73.5	18	55.5	64	71	20	13	M10×1.5	15
63	75	18	57	77	84	20	13	M10×1.5	15
80	86	20	66	98	104	25	15	M16×2.0	21
100	97.5	22	75.5	117	123.5	32	17	M20×2.5	27

Bore size\Item	H	K	KA	KB	M	P	PA
32	14	M6×1.0 Thru.hole: Φ5.2	17	34	22	1/8"	12.5
40	14	M6×1.0 Thru.hole: Φ5.2	17	40	28	1/8"	14
50	17	M8×1.25 Thru.hole: Φ6.8	22	50	35	1/4"	14
63	17	M10×1.5 Thru.hole: Φ8.5	27	60	35	1/4"	16.5
80	22	M12×1.75 Thru.hole: Φ10.3	32	77	43	3/8"	19
100	27	M12×1.75 Thru.hole: Φ10.3	33	94	59	3/8"	23

ACQD

Φ32～Φ100(Stroke＞100)

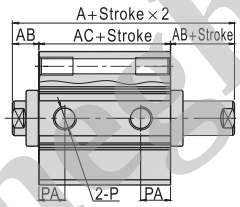

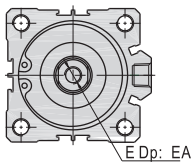

ACQJ

Φ32～Φ100(Stroke＞100)

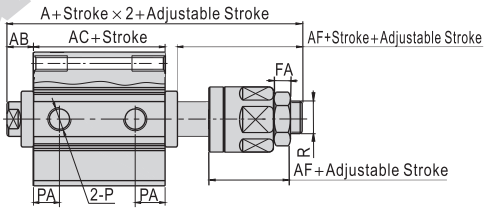

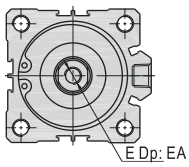

Bore size\Item	A		AC	A		AC	AB	AF	EA	FA	PA	R
	Without magnet			With magnet								
Model	ACQD	ACQJ	ACQD\ACQJ	ACQD	ACQJ	ACQD\ACQJ						
32	79.5	95.5	45.5	89.5	105.5	55.5	17	28	13	7	12.5	M12×1.25
40	89	105	55	99	115	65	17	28	13	7	14	M12×1.25
50	91.5	107.5	55.5	101.5	117.5	65.5	18	29	15	8	14	M16×1.5
63	93	109	57	103	119	67	18	29	15	8	16.5	M16×1.5
80	106	126.5	66	116	136.5	76	20	35.5	21	10	19	M20×1.5
100	119.5	145	75.5	129.5	155	85.5	22	42.5	27	13.5	23	M27×2.0

Remark) The unmarked dimension is the same as ACQ standard type.

Male thread (Bore size: Φ32～Φ100 Stroke＞100 Longer type)

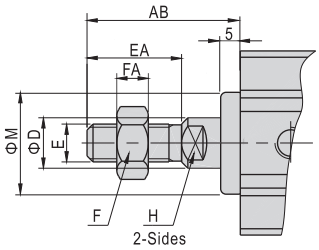

Bore size\Item	AB	D	E	EA	FA	F	H	M
32	38.5	16	M14×1.5	23.5	8	19	14	22
40	38.5	16	M14×1.5	23.5	8	19	14	28
50	43.5	20	M18×1.5	28.5	11	27	17	35
63	43.5	20	M18×1.5	28.5	11	27	17	35
80	53.5	25	M22×1.5	35.5	13	32	22	43
100	53.5	32	M26×1.5	35.5	13	36	27	59

www.Lahechi.com

TACQ Series(With guider type)

Specification

Bore size(mm)	12	16	20	25	32	40	50	63	80	100
Acting type	Double acting									
Fluid	Air(to be filtered by 40 μ m filter element)									
Operating pressure	0.1~1.0MPa(14~145psi)									
Proof pressure	1.5MPa(215psi)									
Temperature ℃	-20~80									
Speed range mm/s	30~500									
Stroke tolerance	$^{+1.0}_{0}$									
Cushion type	Bumper									
Port size ①	M5 × 0.8				1/8"		1/4"		3/8"	
Non−rotating tolerance ②	± 0.2°		± 0.1°							

① PT thread, NPT thread and G thread are available. ② Retract position.
Add) Refer to P397~420 for detail of sensor switch.

Symbol

TACQ

TACQ−S

Stroke

Bore size (mm)	Standard stroke (mm)												Max. std stroke(mm)	Middle stroke range(mm)
	5	10	15	20	25	30	35	40	45	50	75	100		
12 16	●	●	●	●	●	●	×	×	×	×	×	×	30	1~29
20 25	●	●	●	●	●	●	●	●	●	●	×	×	50	1~49
32 40	●	●	●	●	●	●	●	●	●	●	●	●	100	1~99
50 63 80 100	×	●	●	●	●	●	●	●	●	●	●	●	100	5~99

Note) 1. Please contact the company for other special strokes.
2. The dimensions of non-std stroke cylinder has the same dimensions as the next longer stroke std. stroke cylinder. e.g. 23mm stroke cylinder has the same dimensions of 25 std. stroke cylinder.

Product feature

1. JIS standard is implemented and with guider.
2. C clip is adopted to connect the cylinder body and back cover or front cover to make it compact and reliable.
3. The internal diameter of the body is treated with rolling followed by the treatment of hard anodizing, forming an excellent abrasion resistance and durability.
4. The seal of piston adopts heterogeneous two-way seal structure. It has compact dimension and the function of greasel reservation.
5. Compact structure can effectively save installation space.
6. There are magnetic switch slots around the cylinder body, which is convenient to install inducting switch.
7. Double rod non-rotating structure enables to bear large working load and lateral load.

Ordering code

TACQ 50 × 100 S □

- **Model**: TACQ: Compact cylinder (Double acting with guider)
- **Bore size**: 12 16 20 25 32 40 50 63 80 100
- **Stroke**: Refer to stroke table for details
- **Magnet**: Blank: Without magnet; S: With magnet
- **Thread type**: Blank: PT; T: NPT; G: G

Inner structure and material of major parts

TACQS

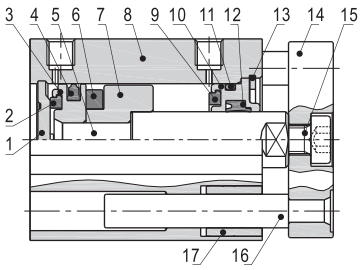

TACQ

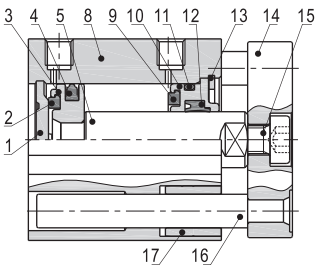

NO.	Item	Material	NO.	Item	Material
1	Back cover	Aluminum alloy	10	Front cover	Aluminum alloy
2	Bumper	NBR	11	O-ring	NBR
3	Piston	Aluminum alloy	12	Front cover packing	NBR
4	Piston seal	NBR	13	C clip	Spring steel
5	Piston rod	Carbon steel with 20 μ m chrome plated	14	Fixing plate	Aluminum alloy
6	Magnet	Sintered metal(Neodymium-iron-boron)	15	Screw	Carbon steel
7	Magnet holder	Aluminum alloy	16	Leader	Stainless steel
8	Body	Aluminum alloy	17	Bushing	Brass
9	Wear ring	NBR			

www.Lahegh.com

Installation and application

1. TACQ series cylinder is designed with double guide rod which is non-rotating. Make sure the non-rotating accuracy of the fixing plate is in the allowable range.

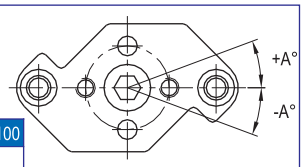

Bore size	12,16	20,25,32,40,50,63,80,100
Non–rotating tolerance	±0.2°	±0.1°

2. Do not apply reverse torque to the piston rods. The torque beyond the limits may cause malfunction or reduction of the service life.

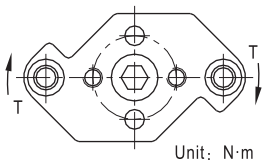

Unit: N·m

Bore size\Stroke	5	10	15	20	25	30	35	40	45	50	75	100
12	0.11	0.10	0.08	0.07	0.07	0.06	–	–	–	–	–	–
16	0.15	0.12	0.11	0.10	0.09	0.08	–	–	–	–	–	–
20	0.37	0.32	0.28	0.25	0.23	0.21	0.19	0.18	0.17	0.16	–	–
25	0.40	0.35	0.31	0.28	0.25	0.23	0.21	0.20	0.18	0.17	–	–
32	0.66	0.59	0.53	0.49	0.45	0.42	0.39	0.36	0.34	0.32	0.25	0.20
40	1.06	0.96	0.88	0.81	0.75	0.70	0.65	0.61	0.58	0.55	0.43	0.36
50	–	1.70	1.56	1.45	1.35	1.26	1.19	1.12	1.06	1.01	0.80	0.67
63	–	3.90	3.62	3.37	3.15	2.96	2.80	2.65	2.51	2.39	1.92	1.61
80	–	7.44	6.98	6.56	6.20	5.87	5.57	5.31	5.07	4.84	3.98	3.37
100	–	11.85	11.19	10.61	10.08	9.60	9.17	8.77	8.41	8.07	6.73	5.77

3. Make sure the lateral load on the mounting bracket is within the limits. Any exceeding may cause malfunction or reduction of the service life.

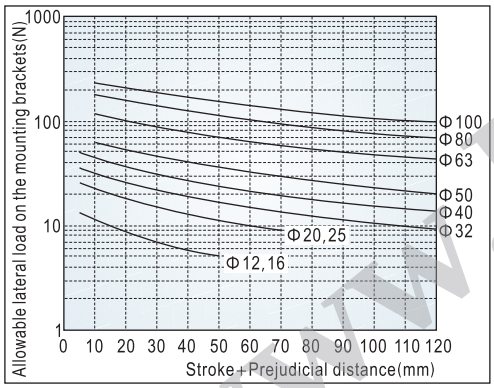

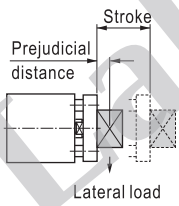

4. Make sure the load quality and the maximum speed are within the limits. Any exceeding may cause malfunction or reduction of the service life.

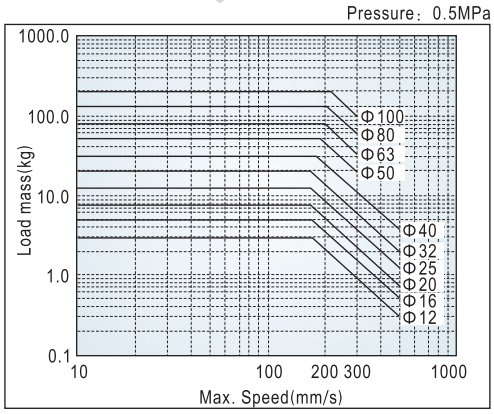

5. Caution before mounting:

5.1) Do not put hands between the mounting bracket and cylinder, which may cause damage to a human body when the piston rod retracts.

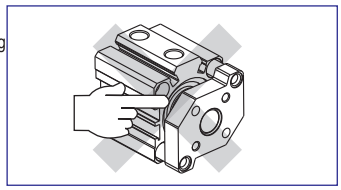

5.2) Make sure the external force against the mounting bracket is concentric with the piston rod. Any extra torque may cause damage to the cylinder.

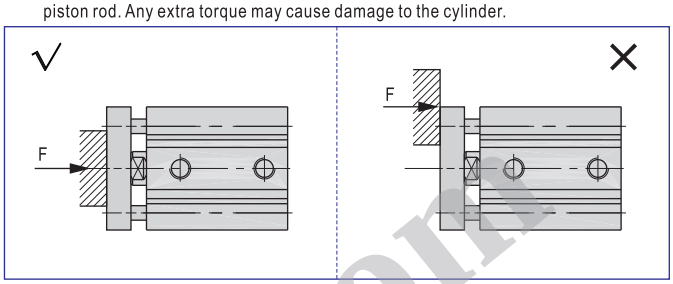

5.3) Install the fixture onto the mounting bracket only when the piston rod is in the retraction state. Do not apply the installation torque on the guide rod.

5.4) Avoid any damage on piston rod and guide rod, which may cause damage on seals and air leakage or malfunction.

www.Laheghi.com

TACQ Series(With guider type)

Dimensions

Bore size: 12,16

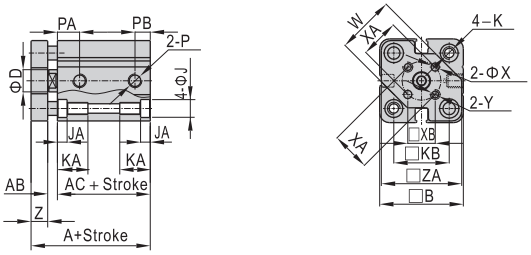

Bore size: 20,25

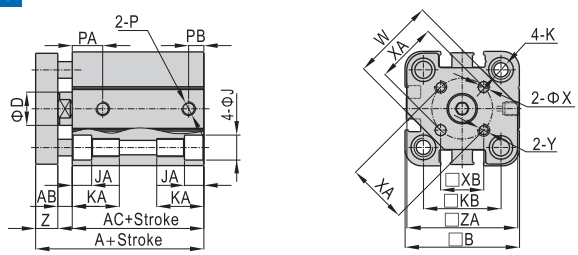

Bore size\Item	A	AC	PA	PB	A	AC	PA	PB	AB	P	B	D	J	JA
Magnet	Without magnet				With magnet									
12	26.5	17.3	7.5	5	37.5	28.3	9	7	3	M5×0.8	26	6	6.5	3.5
16	28	19	8	5.5	40	31	9.5	5.5	3	M5×0.8	30	8	6.5	3.5
20	32	20.5	9	5.5	44	32.5	9.5	5.5	3.5	M5×0.8	36	10	9	7
25	35.5	23	11	5.5	45.5	33	11	5.5	4.5	M5×0.8	41	12	9	7

Bore size\Item	K	KA	KB	W	X	XA	XB	Y	Z	ZA
12	M4×0.7 Thru.hole: Φ3.4	11.5	15.5	15	3	10	7.1	M3×0.5	6	25
16	M4×0.7 Thru.hole: Φ3.4	11.5	20	21	3	14	9.9	M3×0.5	6	29
20	M6×1.0 Thru.hole: Φ5.2	18	25.5	26	4	17	12	M4×0.7	8	35
25	M6×1.0 Thru.hole: Φ5.2	17.5	28	30	5	22	15.6	M5×0.8	8	40

Bore size: 32~100

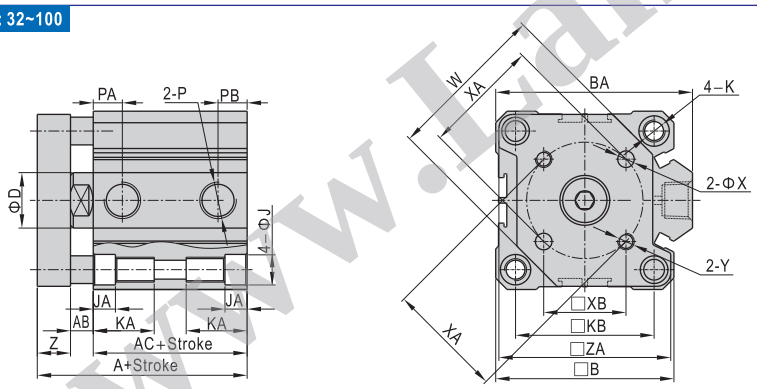

Bore size\Item	A		AC		A	AC	AB	B	BA	D	J	JA	K
	Without magnet				With magnet								
Stroke	St≤50	St≥75	St≤50	St≥75	-	-							
32	40		23.5		50	33.5	6.5	45	49.5	16	9	7	M6×1.0 Thru.hole: Φ5.2
40	46.5		29.9		56.5	39.9	6.6	53	57	16	9	7	M6×1.0 Thru.hole: Φ5.2
50	50.5	60.5	31	41	60.5	41	7.5	64	71	20	11	8	M8×1.25 Thru.hole: Φ6.8
63	56	66	36	46	66	46	8	77	84	20	14	10.5	M10×1.5 Thru.hole: Φ8.5
80	67.5	77.5	43.5	53.5	77.5	53.5	10	98	104	25	17.5	13.5	M12×1.75 Thru.hole: Φ10.3
100	81	91	53	63	91	63	12	117	123.5	32	17.5	13.5	M12×1.75 Thru.hole: Φ10.3

Bore size\Item		KA	KB	P	PA	PB	PA	PB	W	X	XA	XB	Y	Z	ZA
					Without magnet		With magnet								
32	St=5	17.5	34	1/8"	7.5	6.5	10.5	7.5	37	5	28	19.8	M5×0.8	10	43
	St>5				10.5	7.5									
40		17.5	40	1/8"	11	8	11	8	46	5	33	23.3	M5×0.8	10	51
50		22.5	50	1/4"	10.5	10.5	10.5	10.5	58	6	42	29.7	M6×1.0	12	62
63		28.5	60	1/4"	15	10.5	15	10.5	69	6	50	35.4	M6×1.0	12	75
80		35.5	77	3/8"	16	14	16	14	90	8	65	46	M8×1.25	14	95
100		35.5	94	3/8"	20	17.5	20	17.5	113.5	10	80	56.6	M10×1.5	16	114.5

www.Janeghi.com

Accessories

Ordering code

F–ACQ 50 LB

- Accessory
- Model
- Bore size
- Accessory type ①

Mounting accessory	LB: LB type
	FA: FA type
	FB: FB type
	CB: CB type ②
Knuckle③	I: I Knuckle
	Y: Y Knuckle

① Please refer to accessory list for selection and ordering information.
② CB is attached with relevant PIN.
③ Please refer to page 395, 396 for others knuckle.

Accessory selection

Cylinder model \ Accessories			Mounting accessory LB	FA	FB	CB	Knuckle ① I F	Y U	Sensor switch ② CS1-J CS1-G DS1-J DS1-G	DS1-H
ACQ	Female thread	Standard	●	●	●	●	×		×	
		With magnet	●	●	●	●	×		●	
	Male thread	Standard	●	●	●	●	●		×	
		With magnet	●	●	●	●	●		●	
ASQ ATQ	Female thread	Standard	●	●	●	●	×		×	
		With magnet	●	●	●	●	×		●	
	Male thread	Standard	●	●	●	●	●		×	
		With magnet	●	●	●	●	●		●	
ACQD	Female thread	Standard	●	●	●	×	×		×	
		With magnet	●	●	●	×	×		●	
	Male thread	Standard	●	●	●	×	●		×	
		With magnet	●	●	●	×	●		●	
ACQJ	Female thread	Standard	●	●	●	×	×		×	
		With magnet	●	●	●	×	×		●	
	Male thread	Standard	●	●	●	×	●		×	
		With magnet	●	●	●	×	●		●	

① Please refer to P393~396 for knuckle detail,
② Please refer to P397~420 for detail of sensor switch.
③ Mounting accessories and Knuckle unavailable for bore size 125,140,160 cylinder.
DS1-H sensor switch only available for bore size 125,140,160 cylinder.

Material of accessories

Accessories / Bore size	Mounting accessories LB	FA	FB	CB	Knuckle I	Y	F	U
12、16	△	●	●	●	▲	▲	▲	▲
20、25	△	●	●	●	▲	▲	▲	▲
32~100	△	●	●	■	▲	■	▲	▲

●——Aluminum alloy; ▲——S45C; ■——Cast iron, △——SPCC;

List for ordering code of accessories

Accessories / Bore size	Mounting accessory LB	FA	FB	CB	Sensor switch
12	F–ACQ12LB	F–ACQ12FA		F–ACQ12CB	CS1–G DS1–G
16	F–ACQ16LB	F–ACQ16FA		F–ACQ16CB	
20	F–ACQ20LB	F–ACQ20FA		F–ACQ20CB	
25	F–ACQ25LB	F–ACQ25FA		F–ACQ25CB	
32	F–ACQ32LB	F–ACQ32FA		F–ACQ32CB	CS1–J DS1–J CS1–G DS1–G
40	F–ACQ40LB	F–ACQ40FA		F–ACQ40CB	
50	F–ACQ50LB	F–ACQ50FA		F–ACQ50CB	
63	F–ACQ63LB	F–ACQ63FA		F–ACQ63CB	
80	F–ACQ80LB	F–ACQ80FA		F–ACQ80CB	
100	F–ACQ100LB	F–ACQ100FA		F–ACQ100CB	
125	–	–		–	DS1–H CS1–G DS1–G
140	–	–		–	
160	–	–		–	

Accessories / Bore size	Knuckle I: I Knuckle	Y: Y Knuckle	F: F Knuckle	U: U Knuckle
12	F–ACQ12I	F–ACQ12Y	–	F–M5X080U
16	F–ACQ16I	F–ACQ16Y	–	F–M6X100U
20	F–ACQ20I	F–ACQ20Y	F–M8X125F	F–M8X125U
25	F–ACQ25I	F–ACQ25Y	F–M10X125F	F–M10X125U
32	F–ACQ32I	F–ACQ32Y	F–M14X150F	F–M14X150U
40				
50	F–ACQ50I	F–ACQ50Y	F–M18X150F	F–M18X150U
63				
80	F–ACQ80I	F–ACQ80Y	–	–
100	F–ACQ100I	F–ACQ100Y	–	–

Dimensions

FA, FB

Φ12~Φ25

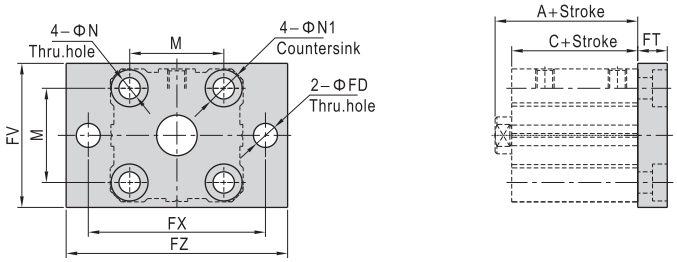

Φ32~Φ100

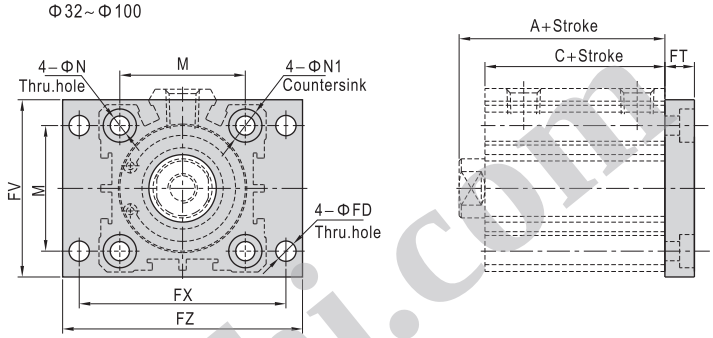

Item / Bore size / Stroke	A Without magnet ≤50	55	≥60	With magnet	C Without magnet ≤50	55	≥60	With magnet	M	N	N1	FD	FT	FV	FX	FZ
12	20.5	-	-	31.5	17	-	-	28	15.5	4.5	7.5	4.5	5.5	25	45	55
16	22	22	-	34	18.5	18.5	-	30.5	20	4.5	7.5	4.5	5.5	30	45	55
20	24	-	34	36	19.5	-	29.5	31.5	25.5	6.5	10.5	6.5	8	39.5	48	60
25	27.5	-	37.5	37.5	22.5	-	32.5	32.5	28	6.5	10.5	6.5	8	42	52	64
32	30	-	40	40	23	-	33	33	34	6.5	10.5	5.5	8	48	56	65
40	36.5	-	46.5	46.5	29.5	-	39.5	39.5	40	6.5	10.5	5.5	8	54	62	72
50	38.5	-	48.5	48.5	30.5	-	40.5	40.5	50	8.5	13.5	6.5	9	67	76	89
63	44	-	54	54	36	-	46	46	60	10.5	16.5	9	10	80	92	108
80	53.5	-	63.5	63.5	43.5	-	53.5	53.5	77	12.5	18.5	11	12	99	116	134
100	65	-	75	75	53	-	63	63	94	12.5	18.5	11	12	117	136	154

ACQ

www.Lahechi.com

CB

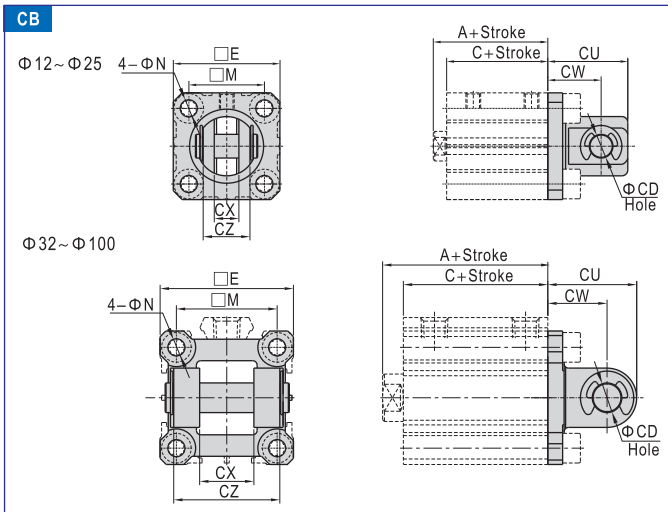

Item / Bore size	A① Without magnet			A① With magnet	C Without magnet			C With magnet	E	M	N	CD	CU	CW	CX	CZ
Stroke	≤50	55	≥60		≤50	55	≥60									
12	20.5	-	-	31.5	17	-	-	28	25	15.5	4.5	5	20	14	5.3	9.8
16	22	22	-	34	18.5	18.5	-	30.5	29	20	4.5	5	21	15	6.8	11.8
20	24	-	34	36	19.5	-	29.5	31.5	36	25.5	6.5	8	27	18	8.3	15.8
25	27.5	-	37.5	37.5	22.5	-	32.5	32.5	40	28	6.5	10	30	20	10.3	19.8
32	30	-	40	40	23	-	33	33	45.5	34	6.5	10	30	20	18.3	35.8
40	36.5	-	46.5	46.5	29.5	-	39.5	39.5	53.5	40	6.5	10	32	22	18.3	35.8
50	38.5	-	48.5	48.5	30.5	-	40.5	40.5	64.5	50	8.5	14	42	28	22.3	43.8
63	44	-	54	54	36	-	46	46	77.5	60	10.5	14	44	30	22.3	43.8
80	53.5	-	63.5	63.5	43.5	-	53.5	53.5	98.5	77	12.5	18	56	38	28.3	55.8
100	65	-	75	75	53	-	63	63	117.5	94	12.5	22	67	45	32.3	63.8

① Value A and value C in the above table is only for ACQ series.
Please refer to relevant content for value C of other series.

LB

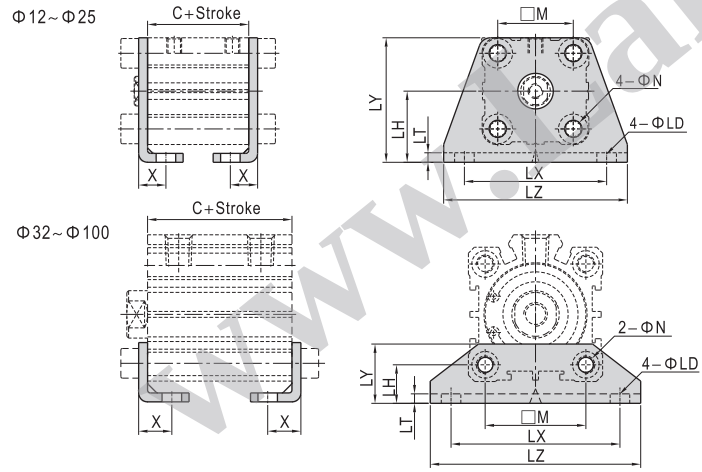

Item / Bore size	C① Without magnet			C① With magnet	M	N	X	LD	LH	LT	LX	LY	LZ
Stroke	≤50	55	≥60										
12	17	-	-	28	15.5	4.5	8	4.5	17	2	34	29.5	44
16	18.5	18.5	-	30.5	20	4.5	8	4.5	19	2	38	33.5	48
20	19.5	-	29.5	31.5	25.5	6.5	9.2	6.5	24	3	48	42	62
25	22.5	-	32.5	32.5	28	6.5	10.7	6.5	26	3	52	46	66
32	23	-	33	33	34	6.5	11.2	6.5	13	3	57	20	71
40	29.5	-	39.5	39.5	40	6.5	11.2	6.5	13	3	64	20	78
50	30.5	-	40.5	40.5	50	8.5	12.2	8.5	14	3	79	22	95
63	36	-	46	46	60	10.5	13.7	10.5	16	3	95	26	113
80	43.5	-	53.5	53.5	77	13	16.5	13	20.5	4.5	118	32	140
100	53	-	63	63	94	13	23	13	24	6	137	36	162

① Value C in the above table is only for ACQ series.
Please refer to relevant content for value C of other series.

I Knuckle

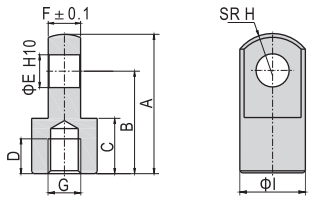

Type\Item	A	B	C	D	E	F	G	H	I
F-ACQ12I	21.5	16	9	6	5	4.7	M5×0.8	6.3	10
F-ACQ16I	32	25	11	8	5	6.2	M6×1.0	8.1	12
F-ACQ20I	34	25	13.5	8.5	8	7.7	M8×1.25	10.3	16
F-ACQ25I	41	30	16	11	10	9.7	M10×1.25	12.8	20
F-ACQ32I	42	30	16	14	10	17.6	M14×1.5	12	22
F-ACQ50I	56	40	20	18	14	21.6	M18×1.5	16	28
F-ACQ80I	71	50	23	21	18	27.6	M22×1.5	21	38
F-ACQ100I	79	55	24	22	22	31.6	M26×1.5	24	44

Y Knuckle

F-ACQ12Y
F-ACQ16Y
F-ACQ20Y
F-ACQ25Y
F-ACQ32Y
F-ACQ50Y
F-ACQ80Y
F-ACQ100Y

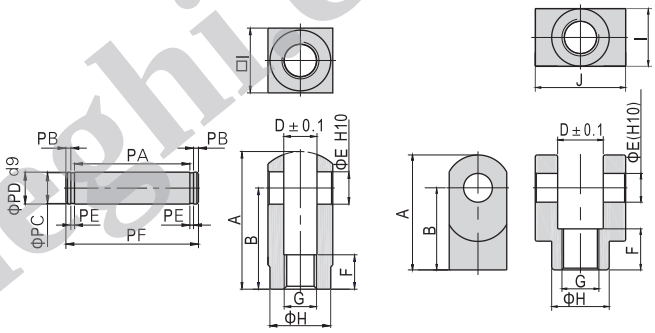

Type\Item	A	B	D	E	F	G	H	I	J	PA	PB	PC	PD	PE	PF
F-ACQ12Y	22	16	5.3	5	6	M5×0.8	9	10	-	10.2	1.5	4	5	0.7	14.6
F-ACQ16Y	28	21	6.6	5	11	M6×1.0	11	12	-	12.4	1.5	4	5	0.7	16.8
F-ACQ20Y	34	25	8.3	8	8.5	M8×1.25	15	16	-	16.2	1.5	7	8	0.9	21
F-ACQ25Y	41	30	10.3	10	10.5	M10×1.25	19	20	-	20.2	2	8	10	1.1	26.4
F-ACQ32Y	42	30	18.4	10	16	M14×1.5	22	22	36	36.2	2	8	10	1.1	42.4
F-ACQ50Y	56	40	22.4	14	20	M18×1.5	28	28	44	44.2	2	12	14	1.1	50.4
F-ACQ80Y	71	50	28.4	18	23	M22×1.5	38	38	56	56.2	2	15	18	1.7	63.6
F-ACQ100Y	79	55	32.4	22	24	M26×1.5	44	44	64	64.2	2.5	19	22	1.7	72.6

www.tahegh.com